Rewarding Learning

Centre Number

Candidate Number

General Certificate of Secondary Education
2023

Technology and Design

Unit 1:

Technology and
Design Core Content

[GTY11]

GTY11

WEDNESDAY 14 JUNE, MORNING

TIME

1 hour 30 minutes.

INSTRUCTIONS TO CANDIDATES

Write your Centre Number and Candidate Number in the spaces provided at the top of this page.
You must answer the questions in the spaces provided.
Do not write outside the boxed area on each page or on blank pages.
Questions which require drawing or sketching should be completed using an H.B. pencil.
All other questions must be completed using black ink only.
Do not write in pencil or with a gel pen.
Answer **all ten** questions.

INFORMATION FOR CANDIDATES

The total mark for this paper is 100.
Quality of written communication will be assessed in Question **10**.
Figures in brackets printed down the right-hand side of pages indicate the marks awarded to each question or part question.
The Formula sheet is on page 3.

13428

24GTY1101

BLANK PAGE

DO NOT WRITE ON THIS PAGE

(Questions start on page 4)

Formulae for GCSE Technology and Design

You should use, where appropriate, the formulae given below when answering questions which include calculations.

1 Potential Difference = current × resistance ($V = I \times R$)

2 Series Resistors $R_t = R_1 + R_2 + ... + R_n$

3 Gear ratio of a simple gear train $= \dfrac{\text{number of teeth on driven gear}}{\text{number of teeth on driver gear}}$

4 Velocity ratio $= \dfrac{\text{diameter of driven}}{\text{diameter of driver}}$

1 **Table 1** refers to a number of symbols.

(a) Using the first row as a guide, complete the table.

Table 1

Sketch of Symbol	Type of Symbol	Name of Symbol
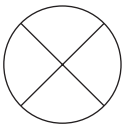	Electronic	Bulb
		Thermistor
	Mechanical	Lever
	Hazard	
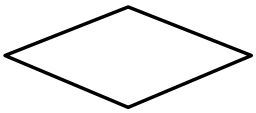		

[8]

(b) The formula for Ohm's law can be written or expressed in different ways. For example if we want to find the value of **V** it is expressed as **V = I × R**.

(i) Complete the formula below to show how the value of **R** can be found.

R =

[1]

(ii) State what **V**, **I** and **R** represent in the Ohm's law formula.

V _____ [1]

I _____ [1]

R _____ [1]

2 Vacuum forming is a common workshop process using plastics. Two plastics are named below:

- Urea formaldehyde
- Polyvinyl chloride

(a) Select the most suitable plastic for vacuum forming, giving a reason for your answer.

_____ [1]

Reason _____

_____ [2]

(b) Describe **four** sequential key stages in the vacuum forming process.

1. _____

_____ [1]

2. _____

_____ [1]

3. _____

_____ [1]

4. _____

_____ [1]

3 **Fig. 1** shows a gear train used in a toy crane. The loads **D** and **E** are raised and lowered by cords wound on pulleys attached to the gears **A** and **C**. The gear **B** can be rotated by a handle as shown.

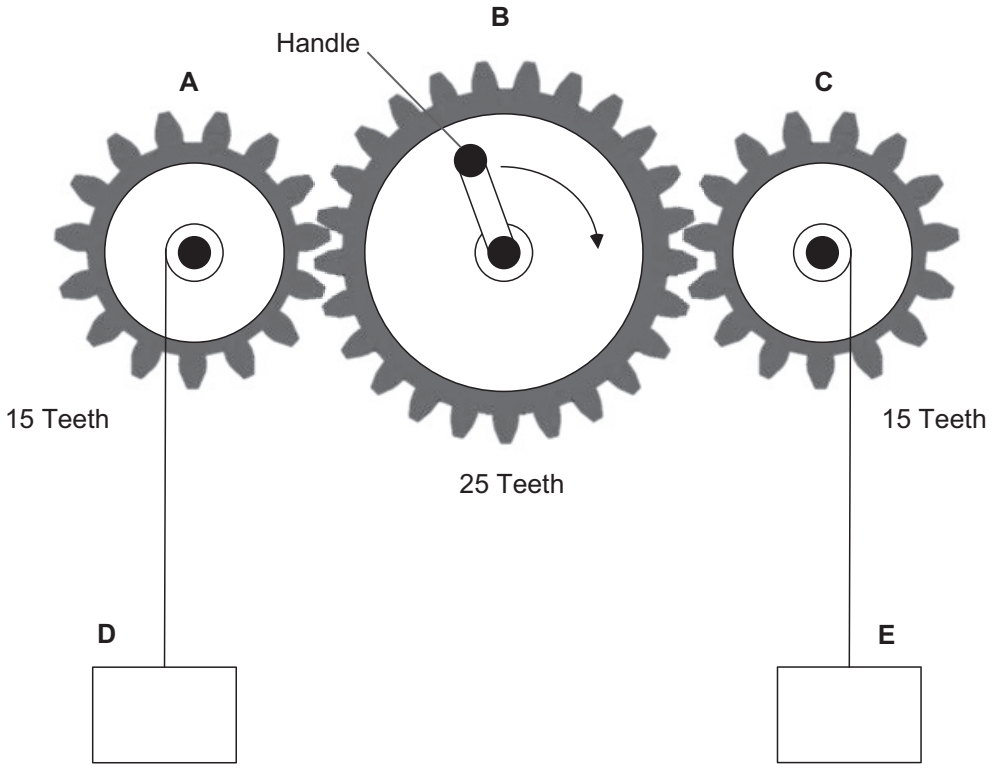

Source: © Principal Examiner

Fig. 1

(i) The handle on **B** is rotated clockwise as shown.

Mark on **Fig. 1**:

- The direction of rotation of gears **A** and **C**; and
- The direction of movement of loads **D** and **E**. [4]

(ii) Wheel **B** is rotated at 30 rev/min.
Calculate the speed of rotation of wheels **A** and **C**.
Candidates need to show their working out in the space below.

Answer _____ [3]

[Turn over

4 **Table 2** shows a number of pneumatic symbols.

Table 2

Pneumatic Symbol	Name of Symbol
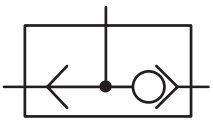	
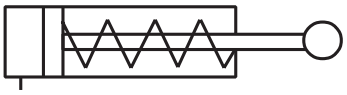	

[3]

(a) Complete **Table 2** by selecting the correct name for each symbol from **Table 3**.

Table 3

3/2 Valve
Single Acting Cylinder
Shuttle Valve
Exhaust
Unidirectional Flow Restrictor
Pressure Source

(b) **(i)** Name the pneumatic component represented by each of the symbols **A** and **B** shown below.

A

B

A _____ **B** _____ [2]

(ii) Explain how each component is operated and how it controls a circuit.

A _____

_____

_____ [2]

B _____

_____

_____ [2]

[Turn over

5 **(a)** Place a tick (✓) in the correct box to respond to each of the following questions.

- Copper is: a good conductor of heat ☐
  a good insulator of heat ☐
- A marking knife is: used to mark lines on metal ☐
  used to mark lines on wood ☐
- Chipboard is: a manufactured board ☐
  a naturally occurring material ☐
- Steel is hardened by: heating to cherry red and quenching in cold water ☐
  heating to cherry red and cooling slowly in air ☐
- Melamine is: a thermosetting plastic ☐
  a thermoplastic ☐

[5]

(b) Wasting and joining are two production methods or processes used on materials such as wood, metal and plastic.

Outline the difference between the wasting and joining processes.

_____

_____ [2]

Give **two** examples of a wasting process that can be applied to a metal.

Example 1 _____

Example 2 _____ [2]

6 **Fig. 2** shows three electronic components used to produce a basic circuit.
The components are labelled **A**, **B** and **C**.

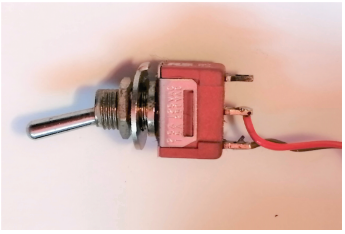

A

B

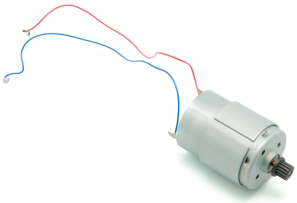

C

Source: © Chief Examiner and © Getty Images

Fig. 2

(a) **(i)** Name the three components.

Component **A** _____

Component **B** _____

Component **C** _____ [3]

(ii) Which component provides the output from the circuit?

_____ [1]

(iii) How is the output controlled in this circuit?

_____ [1]

(b) Complete the circuit diagram shown in **Fig. 3** below by inserting the correct electronic symbols for the components **A**, **B**, and **C** shown in **Fig. 2**.

Fig. 3

[3]

(c) It was decided to replace component **C** with the component shown in **Fig. 4.**

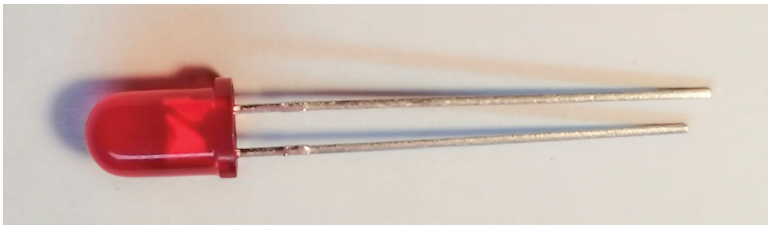

Source: © Chief Examiner

Fig. 4

(i) Name the component shown.

_____ [1]

(ii) The component shown in **Fig. 4** requires a protective resistor.

If the protective resistor has a value of 390 Ω, use the information below to work out the colour bands of this resistor.

0 = Black	1 = Brown	2 = Red	3 = Orange	4 = Yellow
5 = Green	6 = Blue	7 = Violet	8 = Grey	9 = White

Colour Band 1 _____ [1]

Colour Band 2 _____ [1]

Colour Band 3 _____ [1]

BLANK PAGE

DO NOT WRITE ON THIS PAGE

(Questions continue overleaf)

7 **Fig. 5** shows a house which has an alarm system fitted. When the alarm system is set it will operate a buzzer and an LED on the alarm box if an outside door is opened. This will happen 30 seconds after an outside door is opened. The buzzer and the LED will continue to operate unless the alarm system is reset.

Source: © Getty Images

Fig. 5

Complete the flow chart in **Fig. 6** to illustrate the program to run the alarm system.

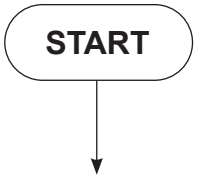

[11]

Fig. 6

[Turn over

8 Two steel plates could be permanently joined together either by brazing, soft soldering or welding.

(a) Put the three joining processes in order, based on the joining temperature required. Start with the highest temperature first.

1. _____ [1]

2. _____ [1]

3. _____ [1]

(b) Outline **four** stages in the process of soft soldering.

1. _____ [1]

2. _____ [1]

3. _____ [1]

4. _____ [1]

(c) Two semi-permanent joining processes for metals are:

- using nuts and bolts; and
- using machine screws.

(i) Outline the difference between the two semi-permanent methods of joining.

_____

_____

_____

_____ [2]

(ii) Select the most appropriate semi-permanent method, from the two given, to join the two metal plates shown in **Fig. 7**. Give a reason for your choice.

Method _____

Reason _____

_____

_____ [2]

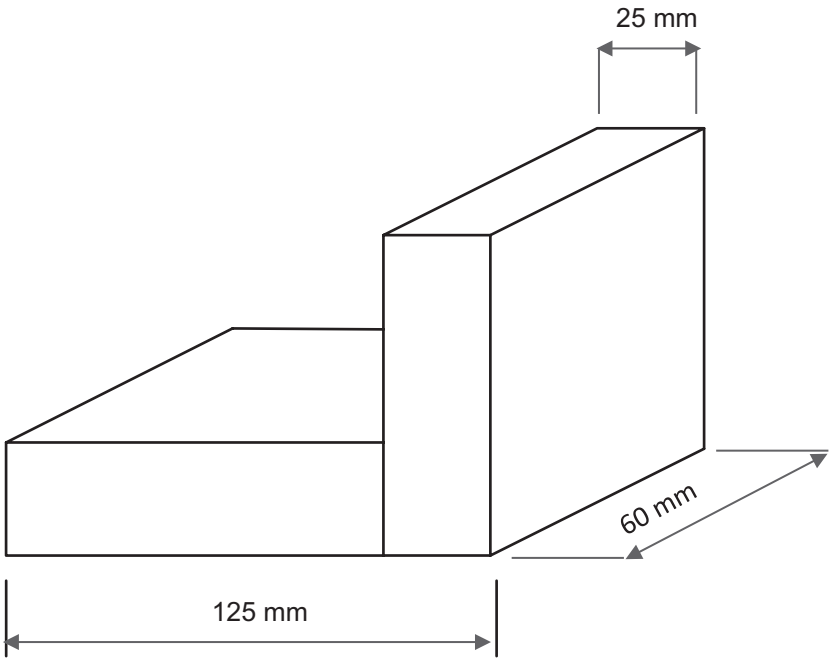

Source: © Chief Examiner

Fig. 7

9 **(a)** **Fig. 8** shows a pneumatic circuit for slicing a large block of cheese.

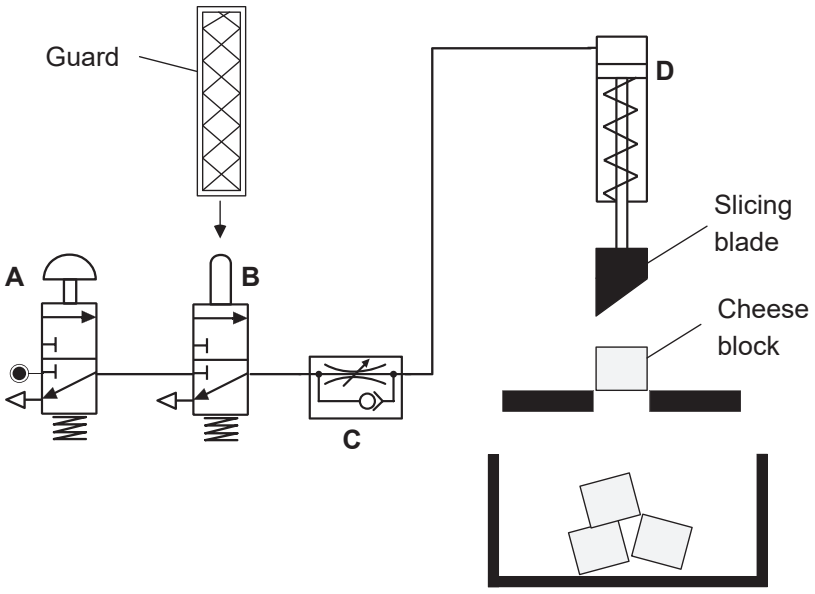

Source: © Principal Examiner

Fig. 8

(i) Four pneumatic components in **Fig. 8** are lettered. Complete **Table 4** by inserting the letter **A**, **B**, **C** or **D** to represent each component listed.

Table 4

Pneumatic Component	Letter
Unidirectional Flow Restrictor	
3/2 Valve Plunger Operated	
Single Acting Cylinder	
3/2 Valve Push Button Operated	

[4]

(ii) Explain how component **D** is operated to slice the cheese block.

_____

_____ [2]

(iii) During slicing it was found that the shape of the cheese block was being disfigured due to the blade cutting too slowly.

Explain how this problem could be overcome.

_____

_____ [2]

(iv) The circuit uses two components in a logic combination to activate the circuit. Identify the logic sequence.

_____ [1]

(b) **(i)** Suggest a material that would be used in the production of the slicing blade.

_____ [1]

(ii) Giving **two** reasons, explain why the material you have chosen would be suitable for the slicing blade.

_____

_____ [2]

10 An award plaque is to be produced by fitting a brass sheet on to a mahogany board. The brass sheet measures 200 mm × 100 mm × 3 mm and the mahogany board measures 300 mm × 200 mm × 15 mm. The brass sheet is to be attached to the mahogany board using four countersunk brass woodscrews. These should be located in the corners of the brass sheet a distance of 10 mm in from each side. The brass sheet is to be centred on the mahogany board so that a mahogany border will surround the brass sheet.

Describe the processes of marking out, drilling and fitting to enable the brass sheet to be fitted accurately in the centre of the mahogany board. Your answer should make reference to the tools and equipment used and the safety precautions employed throughout the task.

Quality of written communication will be assessed in this question.

[10]

THIS IS THE END OF THE QUESTION PAPER

Sources

Table 1.....© Getty Images

Fig.2, image A.....© Chief Examiner
Fig.2, image B.....© Getty Images
Fig.2, image C.....© Getty Images
Fig.5.....© Getty Images

DO NOT WRITE ON THIS PAGE

For Examiner's use only	
Question Number	Marks
1	
2	
3	
4	
5	
6	
7	
8	
9	
10	
Total Marks	

Examiner Number

Permission to reproduce all copyright material has been applied for.
In some cases, efforts to contact copyright holders may have been unsuccessful and CCEA will be happy to rectify any omissions of acknowledgement in future if notified.